HYUNDAI WELDING

Rev. 03

SW-309L Cored

FLUX CORED ARC WELDING CONSUMABLE
FOR WELDING OF DISSMILAR METALS
STAINLESS STEELS AND CARBON STEELS
OR STAINLESS STEELS AND LOW ALLOY METALS

2021.02

HYUNDAI WELDING CO., LTD.

SW-309L Cored

❖ Specification

AWS A5.22	E309LT1-1/-4
JIS Z 3323	TS309L-FB1
EN ISO 17633-A	T 23 12 L P M21/C1 2

❖ Applications

SW-309L Cored is designed for welding of dissimilar metals such as Stainless steels and carbon steels or stainless steels and low alloy steels.

❖ Characteristics on Usage

1. SW-309L Cored is suitable for all position welding makes easier re-arcing ,beautiful bead appearance and better slag removability. This wire contains a high ferrite level in its austenite thus providing better weldability together superior Heat and corrosion resistance.
2. SW-309L Cored is suitable for dissimilar welding such as stainless steel to carbon steel or low-alloy steels, and for under-layer welding on cladded side groove of cladded stainless steel.

❖ Note on Usage

Use 100% CO_2 gas or Ar+20~25% CO2 gas

❖ Packing

Diameter	0.9mm (0.035in)	1.2mm (0.045in)	1.4 (0.052in)	1.6 (1/16in)
Spool *including ball pac	5kg (11lbs)	12.5kg (28lbs)	15kg (33lbs)	20kg (44lbs)

Mechanical Properties & Chemical Composition of All Weld Metal

❖ Welding Conditions

Method by AWS Spec.

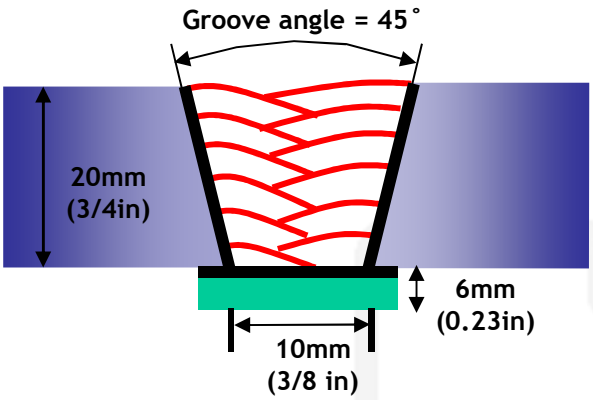

[Joint Preparation & Layer Details]

Diameter(mm)	:	1.2mm(0.045in)
Shielding Gas	:	100% CO2
Flow Rate(ℓ /min.)	:	20~22
Amp./ Volt.	:	210/30
Stick-Out(mm)	:	20(3/4 in)
Pre-Heat(℃)	:	R.T . ℃(˚F)
Interpass Temp.(℃)	:	≤150℃(302˚F)
Polarity	:	DC(+)

❖ Mechanical Properties of All weld metal

Consumable	**Tensile Test**		**CVN Impact Test J(ft · lbs)**	
SW-309L Cored	**TS (Mpa/lbs/in²)**	**EL (%)**	**-20℃ (-4˚F)**	**-60℃ (-76˚F)**
	540(78,300)	41.0	49(36.1)	46(33.9)
AWS A5.22 E309LTX-X	**≥520**	**≥ 30**	**Not Specified**	

❖ Chemical Analysis of All weld metal(wt%)

Consumable	Shielding Gas	Chemical Composition (%)								
		C	Si	Mn	P	S	Ni	Cr	Mo	Cu
SW-309L Cored	100%CO2	0.027	0.74	1.27	0.021	0.006	12.99	23.36	0.130	0.125
AWS A5.22 E309LTX-X		≤0.04	≤1.0	0.5 ~2.5	≤0.04	≤0.03	12.0 ~14.0	22.0 ~25.0	≤ 0.5	≤ 0.5

Mechanical Properties & Chemical Composition of All Weld Metal

❖ Welding Conditions

Method by AWS Spec.

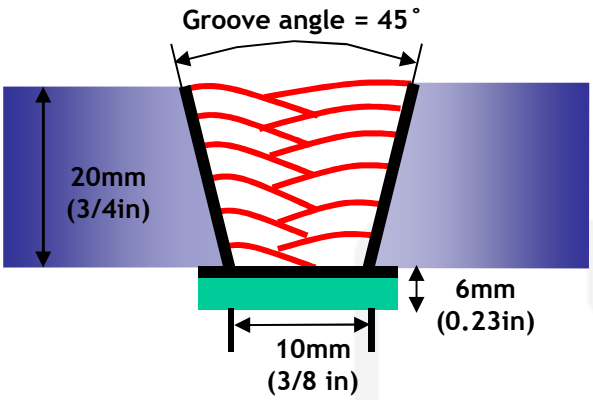

[Joint Preparation & Layer Details]

Diameter(mm)	:	1.2mm(0.045in)
Shielding Gas	:	Ar+200% CO2
Flow Rate(ℓ /min.)	:	20~22
Amp./ Volt.	:	210/29
Stick-Out(mm)	:	20(3/4 in)
Pre-Heat(℃)	:	R.T . ℃(°F)
Interpass Temp.(℃)	:	≤150℃(302°F)
Polarity	:	DC(+)

❖ Mechanical Properties of All weld metal

Consumable	**Tensile Test**		**CVN Impact Test J(ft · lbs)**	
SW-309L Cored	**TS (Mpa/lbs/in²)**	**EL (%)**	**-20℃ (-4°F)**	**-60℃ (-76°F)**
	580(84,100)	39	46(33.9)	40(29.5)
AWS A5.22 E309LTX-X	**≥520**	**≥ 30**	**Not Specified**	

❖ Chemical Analysis of the weld metal(wt%)

Consumable	Shielding Gas	Chemical Composition (%)								
		C	Si	Mn	P	S	Ni	Cr	Mo	Cu
SW-309L Cored	Ar+ 20% CO2	0.026	0.86	1.43	0.021	0.006	12.82	23.52	0.130	0.123
AWS A5.22 E309LTX-X		≤0.04	≤1.0	0.5 ~2.5	≤0.04	≤0.03	12.0 ~14.0	22.0 ~25.0	≤ 0.5	≤ 0.5

Mechanical Properties & Chemical Composition of All Weld Metal

❖Bead Appearance

Horizontal Fillet(2F, PB) , Base : STS 304L(6mm,0.23in)	Fillet Vertcal up(3F, PF) , Base : STS 304L(6mm,0.23in)	
		
100% CO2(220A/30V)		
		
Ar+20% CO2(220A/28V)	100% CO2(160A/25V)	Ar+20% CO2(160A/24V)
Dissimilar welding Base : C/S+STS 304L(6T)		
	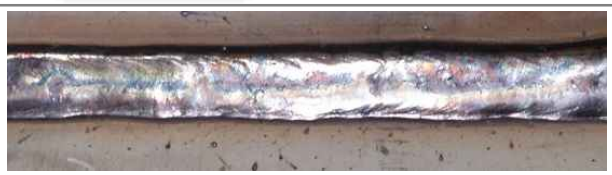	
100% CO2(220A/30V)	Ar+20% CO2(220A/28V)	

❖ δ – Ferrite No.

Consumable	Shielding Gas	Diagram			FERITSCOPE MP-30 * (FISCHER)
		Schaeffler	Delong	WRC(1992)	
SW-309L Cored	100% CO2	11.2	20.4	14.9	18.5~19.5
	Ar+20% CO2	12.0	21.6	16.8	18.0~19.0

Welding Efficiency & Proper Welding Condition

❖ Deposition Rate & Efficiency

Consumable (size)	Shielding Gas	Welding Conditions		Wire Feed Speed m/min (in/min)	Deposition Efficiency(%)	Deposition Rate kg/hr(lb/hr)
		Amp. (A)	Volt. (V)			
1.2mm (0.045 in)	100%CO_2	210	30	12(472)	86~88	4.6(10.1)
	Ar-20%CO_2	210	29	12(472)	87~89	4.8(10.6)
1.6mm (1/16 in)	100%CO_2	290	33	8.9(350)	86~88	5.5(12.1)
	Ar-20%CO_2	290	32	8.9(350)	87~89	5.(12.6)
Remark					Deposition efficiency =(Deposited metal weight/Wire weight used)×100	Deposition rate =(Deposited metal weight/Welding time,min.)×60

❖ Proper Current Range

Consumable	Shielding Gas	Welding Position	Wire Dia.	
			1.2mm (0.045 in)	1.6mm (1/16 in)
SW-309L Cored	100%CO_2 or Ar-20~25%CO_2	F	160~220Amp	250~290Amp
		HF	160~220Amp	250~290Amp
		V-Up & OH	140~180Amp	-

Approvals

Consumables	Shielding Gas	KR	ABS	LR
SW-309L Cored	C1	RW309LG(C) (-20 ℃≥34J) 1.2~1.6	AWS A5.22 E309LT1-1 1.2~1.6	SS/CMn 1.2~1.6
		BV	**DNV**	**NK**
		309L with KV at -20 ℃ (-20 ℃≥34J) 1.2~1.6	309L 1.2~1.6	KW309LG(C) 1.2~1.6
		CWB	**TUV**	**CE**
		AWS A5.22-95 E309LT1-1 0.9~1.6	EN 12073 T 23 12 L P C2 0.9~1.6	EN 12073 T 23 12 L P C2 0.9~1.6
		DB	**CCRS**	
		T 23 12 L P C 2(1.4322) DIN EN ISO 17633-A 0.9~1.6	AWS A5.22 E309LT1-1 1.2~1.6	

Consumables	Shielding Gas	CWB	TUV	CE
SW-309L Cored	M21	AWS A5.22-95 E309LT1-4 0.9~1.6	EN 12073 T 23 12 L P M2 0.9~1.6	EN 12073 T 23 12 L P M2 0.9~1.6
		DB	**-**	**-**
		T23 12 L P M 2(1.4322) DIN EN ISO 17633-A 0.9~1.6	-	-